WTB50

Ideal for the temperature control of ointments, emulsions, samples, plates and nutrient solutions in the laboratory, as well as warm storage and calibration in the industrial segment



On this page, you can find all the essential technical data on the Memmert water bath. Our customer relations team will be pleased to help if you want further information. If you should require a customised special solution, please contact our technical specialists at sales@memmert.com.

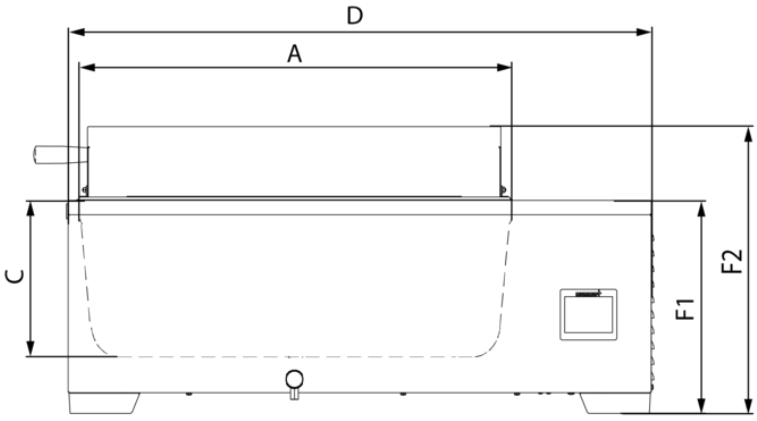

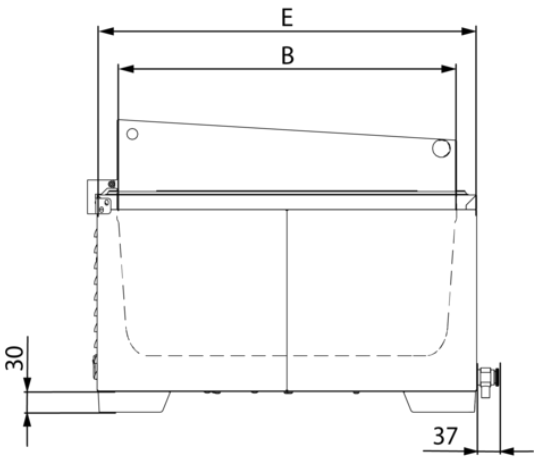

Memmert GmbH + Co. KG | Tel. +49 (0) 9122/925-0 | E-Mail info@memmert.com

Temperature

Temperature sensor	digital temperature sensor, mounted on the outside of the bath
Temperature	Setting Celsius / Fahrenheit
Working temperature range	at least 5 above ambient to +100 (with cover, depending on ambient pressure)
Setting temperature range	+10 to +100 °C
Setting accuracy temperature	0.1 °C

Control technology

Calibration	2-point calibration
Controller	intuitive 3.5" colour graphic display with touch screen
Controller	digital display of set and actual temperature and of (remaining) programme time

Safety

Temperature control	two-stage safety system to prevent overtemperature (pressure sensor for level monitoring, thermal fuse for heating shutdown in case of error)
Temperature control	individually adjustable overtemperature alarm, visual and acoustic
Temperature control	Independent temperature limiter to switch off the heating in case of failure
Autodiagnostic system	microprocessor PID-temperature controllerwith integrated autodiagnostic system withfault indicator

Heating concept

Heating	corrosion-proof large-area heating on the outside of the interior

Stainless steel interior

Interior	Deep-drawn stainless steel tray (stainless steel W.St. 1-4301), without corners and edges for easy cleaning incl. central drain (no disturbing installations)
Dimensions	l(A) x w(B) x h(C): 592 x 472 x 200 mm
Volume	51 l
Liquid level min.	20 mm
Liquid level max.	164 mm

Standard equipment

Cover	Stainless steel gable cover
Drain system	innovative drain system - easy to empty
Timer	digital timer from 1 min. up to 99 hours 59 min., visual and acoustic

Memmert GmbH + Co. KG | Tel. +49 (0) 9122/925-0 | E-Mail info@memmert.com

Textured stainless steel casing

Dimensions	l(D) x w(E) x h(F2): 868 x 554 x 425 mm

Electrical data

Voltage **Electrical load**	230 V, 50/60 Hz approx. 2800 W
Voltage **Electrical load**	115 V, 50/60 Hz approx. 1840 W

Ambient conditions

Installation	The vent openings in the left and back side must remain unobstructed. The distance to the wall must be at least 100 mm on the sides and at least 150 mm to the rear. The minimum spacing from the top of the bath to the next ceiling is 750 mm.
Ambient temperature	+5 °C to +40 °C
Humidity rh	max. 80 %, non-condensing
Overvoltage category	II
Pollution degree	2

Packing/shipping data

Dimensions approx incl. carton	l x w x h: 968 x 654 x 525 mm
Transport information	The appliances must be transported upright
Customs tariff number	8419 8998
Country of origin	Federal Republic of Germany
WEEE-Reg.-No.	DE 66812464
Net weight	approx. 30 kg
Gross weight carton	approx. 37 kg

Standard units are safety-approved and bear the test marks